PRODUCT GUIDANCE

FLEX™ SHEETING

PDG16003-

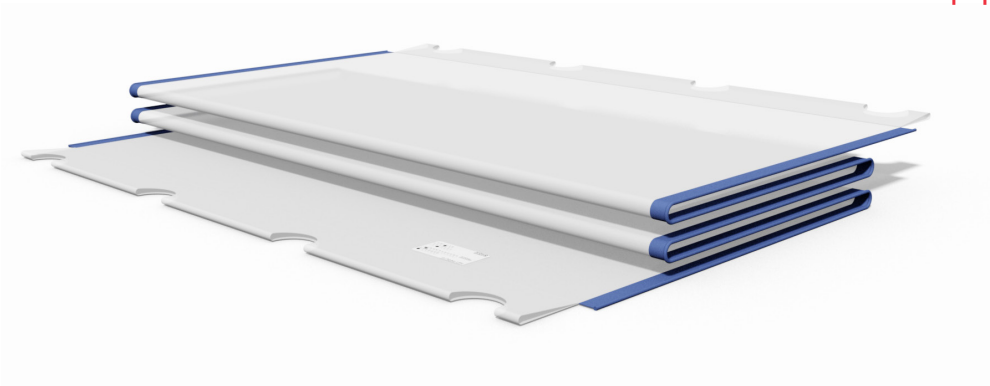

GENERAL NOTES	TECHNICAL INFORMATION	
DESSA Flex™ is a new lightweight roof sheet providing superb weather protection and allowing high levels of light to pass through. Flex™ is simple to install due to its low friction keder bands. Designed to work with existing DESSA temporary roof systems and offers the following benefits: · Economical choice. · Strong reinforced structure. · Easy and fast installation. · Environmentally friendly polymer technology. · Superb light transmission. · Lightweight. · Stock item.	Material: Reinforcement: Roll Widths: Roll Lengths: Colour: Weight: Tensile Strength: Tear Resistance: Bead Pullout: Light Transmission: Fire Testing: Gable Sheets:	Co-polymer LDPE 6x8 mesh from PET 2.00,2.07,2.50,2.57,3.00,3.07m 15,20,25,30,35,40,45m Transparent 360gsm MD:>700N/50mm,CD:>900N/50mm >400N >1400N/100mm >90% N/A No

INSTALLATION

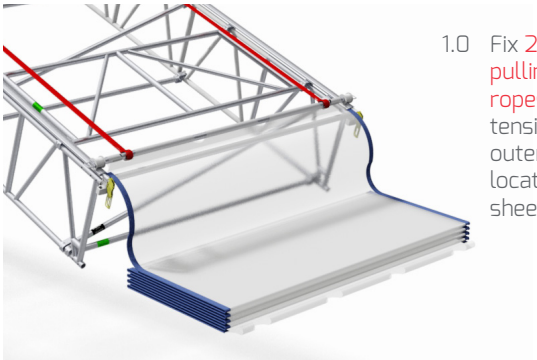

1.0 Fix 2no. DESSA pulling straps or ropes to sheet tensioning bar at outer two pocket locations. Offer sheet to roof bay.

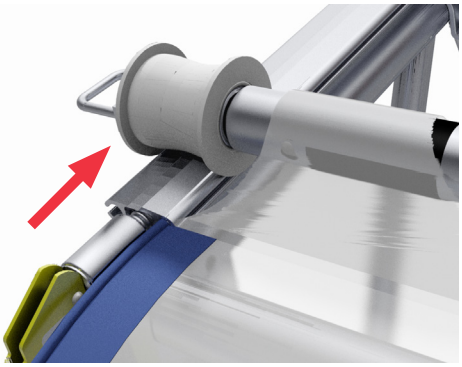

2.0 Ensure sheet pulling wheel and keder engage with the sheet track. Manually feed sheet through track for first 300mm.

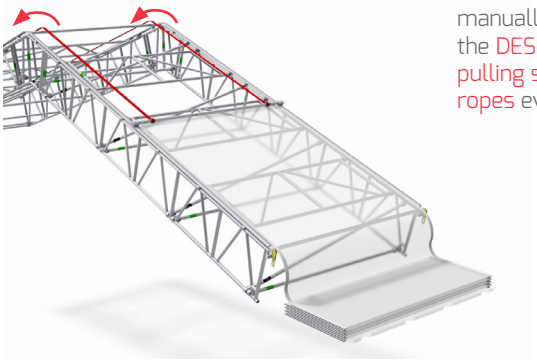

3.0 Install sheet by manually pulling the DESSA pulling straps or ropes evenly.

4.0 Remove sheet pulling wheels and terminate the sheet using 4 ratchet straps.

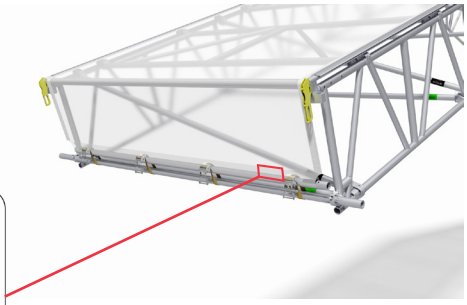

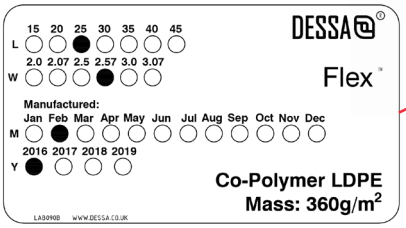

Identification label LAB090, stamped accordingly to reflect physical properties and date of manufacture.

The information provided is based on prevailing legislation and/or testing. DESSA Ltd reserves the right to make technical changes, users should ensure that only current revisions of this Product Guidance are used. The published data refers to original genuine DESSA materials only. © DESSA Limited. No unauthorised use, copy or disclosure is to be made.